PROJECT 36: Design and Analysis of Creating Array and Buses of Inverters by using Cadence Virtuoso

A Comprehensive Study of Analog Circuits

By: Priya Chaudhary, Astitva Johri and
Bhavya Solanki

Chapters:

List of Figures……..…… 3

1. Introduction …….. 4
2. Brief Description…… 5
3. Circuit Design……. 6-8
   3.1 Schematic Design……... 6
   3.2 Simulation Setup...…….. 6
   3.3 Transient Response……. 7
4. Simulation Results…….. 9
5. Advantages and Disadvantages…….. 10
   5.1 Advantages……. 10
   5.2 Disadvantages……. 10
6. Conclusion…….. 11
7. Frequently Asked Questions (FAQs)…….. 12

LIST OF FIGURES

Figure 3.1 Circuit of NOT Array ……..…..... 7

Figure 3.2 Array and Buses Simulation ……. 8

Figure 3.3 Array and Buses Testbench ……..…. 8

Figure 4.1 Simulation Result of NOT Array ……..... 9

Figure 4.2 Simulation Result of Array and Buses ……..... 9

1. INTRODUCTION

In modern digital circuit design, inverters serve as fundamental building blocks, crucial for logic operations and signal processing. An inverter is a basic logic gate that outputs the opposite logic level to its input. When designing complex circuits, creating arrays and buses of inverters helps to streamline signal propagation, reduce design complexity, and ensure uniform performance across multiple logic stages.

Cadence Virtuoso is an advanced toolset used for designing, simulating, and analyzing integrated circuits. It enables engineers to efficiently design inverter arrays and buses, facilitating improved layout organization and connectivity. The primary goal of this document is to provide a structured approach to designing and analyzing inverter arrays and buses using Cadence Virtuoso, ensuring high performance and reliability.

2. BRIEF DESCRIPTION

An array of inverters is a systematic arrangement where multiple inverters are placed in a structured manner to optimize performance, area, and layout design. These arrays are often used in large-scale integrated circuits, memory designs, and clock buffers.

Buses play a crucial role in interconnecting multiple inverters efficiently. They provide a structured pathway for signals to propagate with minimal delay and reduced power dissipation. Proper bus design is essential to avoid routing congestion, signal integrity issues, and unnecessary power loss.

The design process using Cadence Virtuoso includes the following steps:

- **Schematic Design**: Creating the basic inverter circuit with transistor-level implementation.
- **Layout Design**: Arranging the inverters systematically while ensuring minimal parasitic effects.
- **Interconnect Routing**: Establishing bus connections for optimal signal flow.
- **Simulation and Analysis**: Performing performance validation through transient, DC, and power-delay analyses.

Through this structured approach, inverter arrays and buses can be efficiently designed to meet the demands of high-speed and power-efficient digital circuits.

3. CIRCUIT DESIGN

3.1 Schematic Design

1. **Create a new schematic cell view** in Cadence Virtuoso.
2. **Add the PMOS and NMOS transistors**:
    - PMOS connected between VDD and output.
    - NMOS connected between GND and output.
3. **Connect the gates of both transistors** to the input signal.
4. **Connect the drain terminals** of both transistors to the output node.
5. **Verify the connectivity** using the design rule check (DRC).
6. **Save and check the design** for consistency.

For creating an array, multiple inverters are instantiated and connected systematically, with their inputs receiving the same signal or following a predefined logic.

3.2 Simulation Setup

1. **Open the ADE-L environment** in Cadence Virtuoso.
2. **Select the simulator** (Spectre is commonly used).
3. **Set up the simulation type**:
    - **DC Analysis** to check voltage transfer characteristics.
    - **Transient Analysis** to observe input-output waveforms over time.
4. **Apply input signals**:
    - Use a pulse waveform for transient analysis.
    - Use a DC sweep for voltage transfer characteristics.
5. **Specify the output signals** to be plotted (Vout vs. Vin).
6. **Run the simulation** and analyze the results.

3.3 Transient Response

The transient analysis helps visualize how the inverter responds to time-varying signals.

- **Time domain response**: The output should be a complementary waveform of the input.
- **Propagation delay calculation**: Measure the time difference between input and output transitions.
- **Power dissipation analysis**: Evaluate dynamic power consumption.

By optimizing transistor sizing and interconnect design, the performance of inverter arrays and buses can be significantly improved.

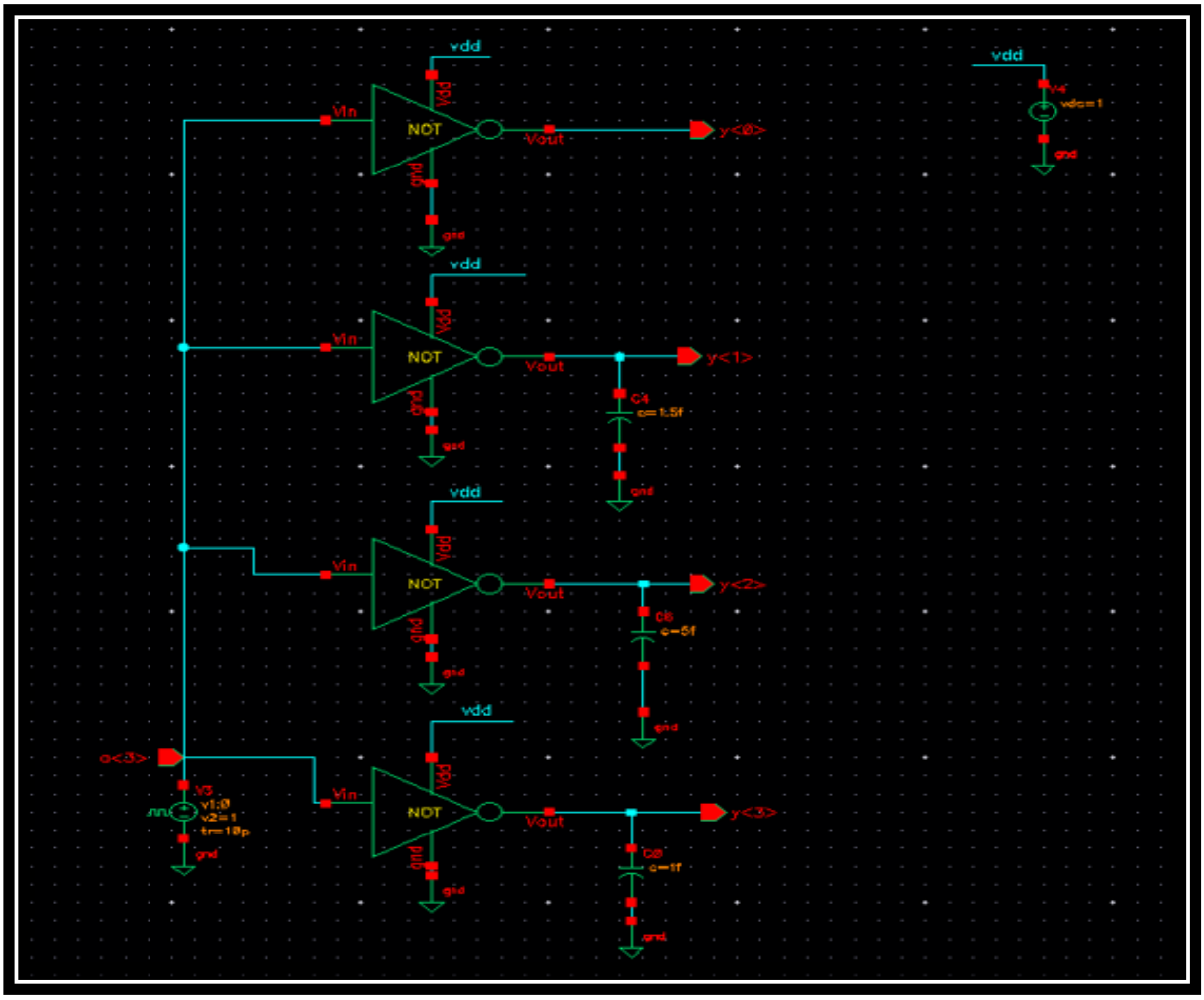

Figure 3.1 Circuit of NOT Array

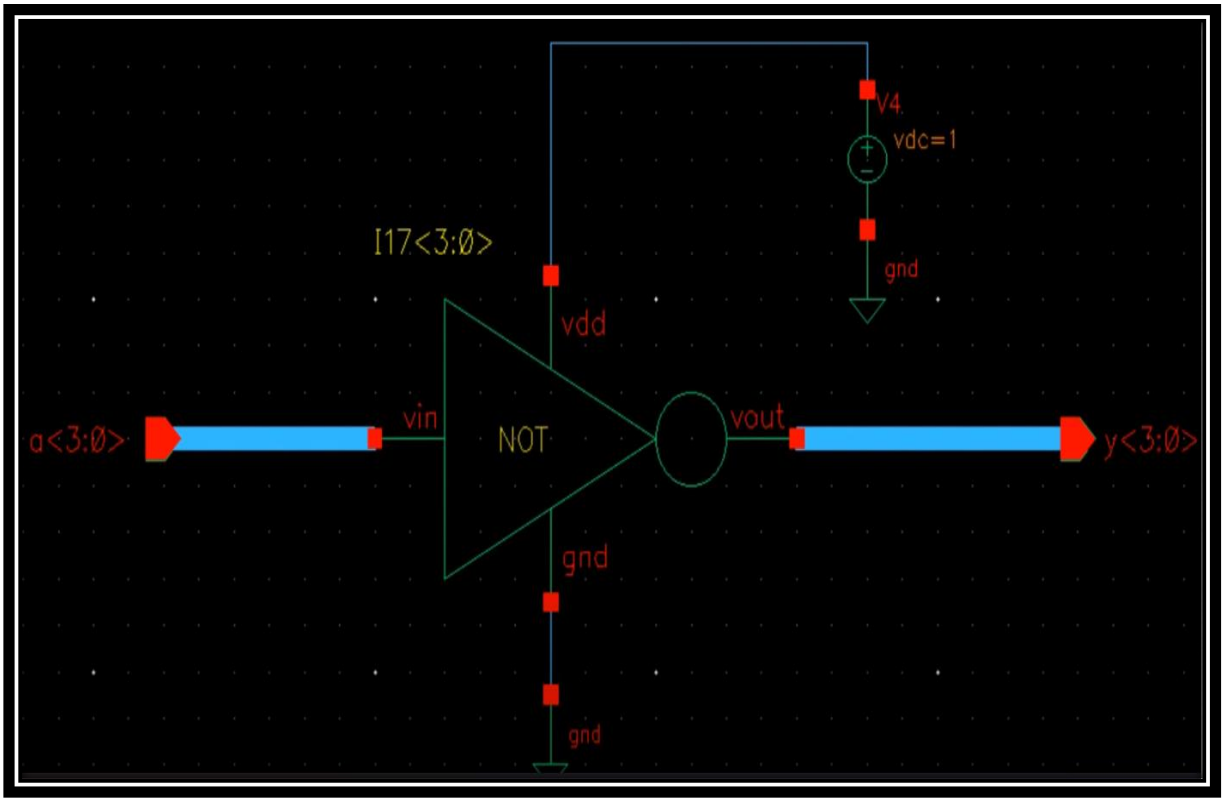

Figure 3.2 Array and Buses Simulation

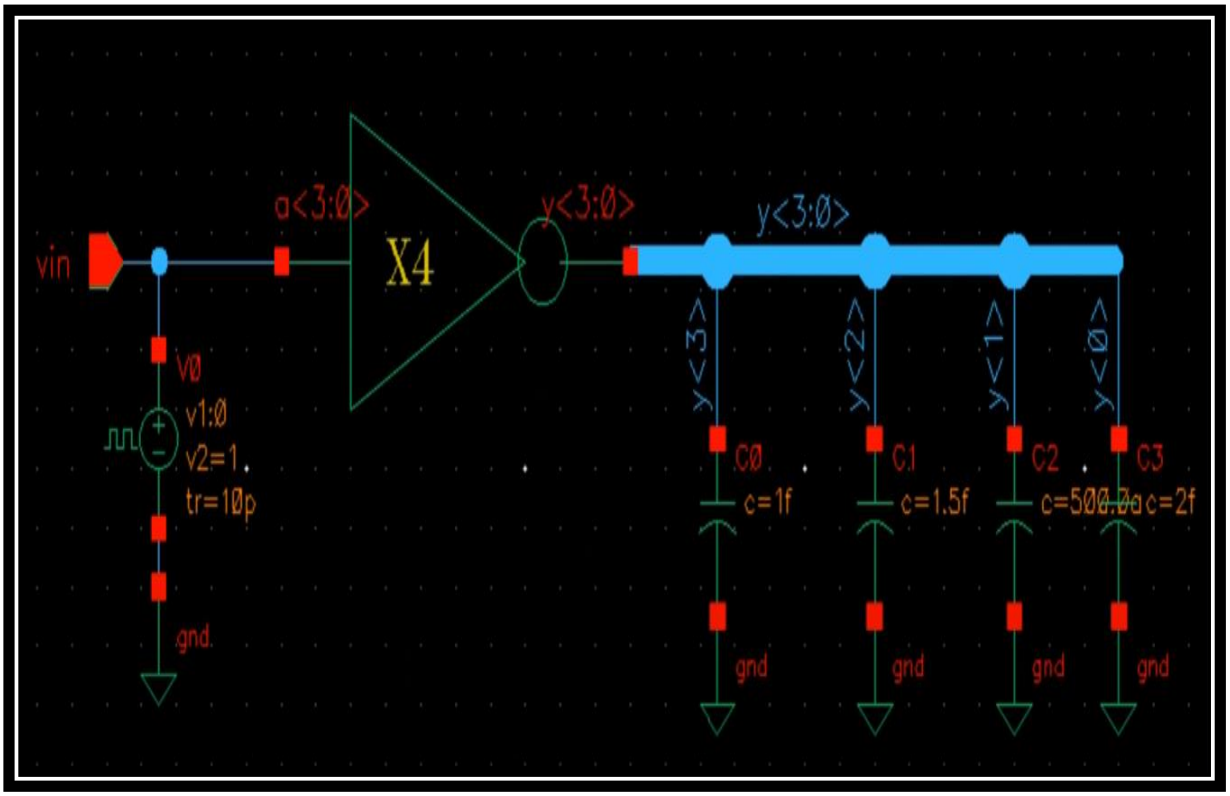

Figure 3.3 Array and Buses Testbench

4. SIMULATION RESULTS

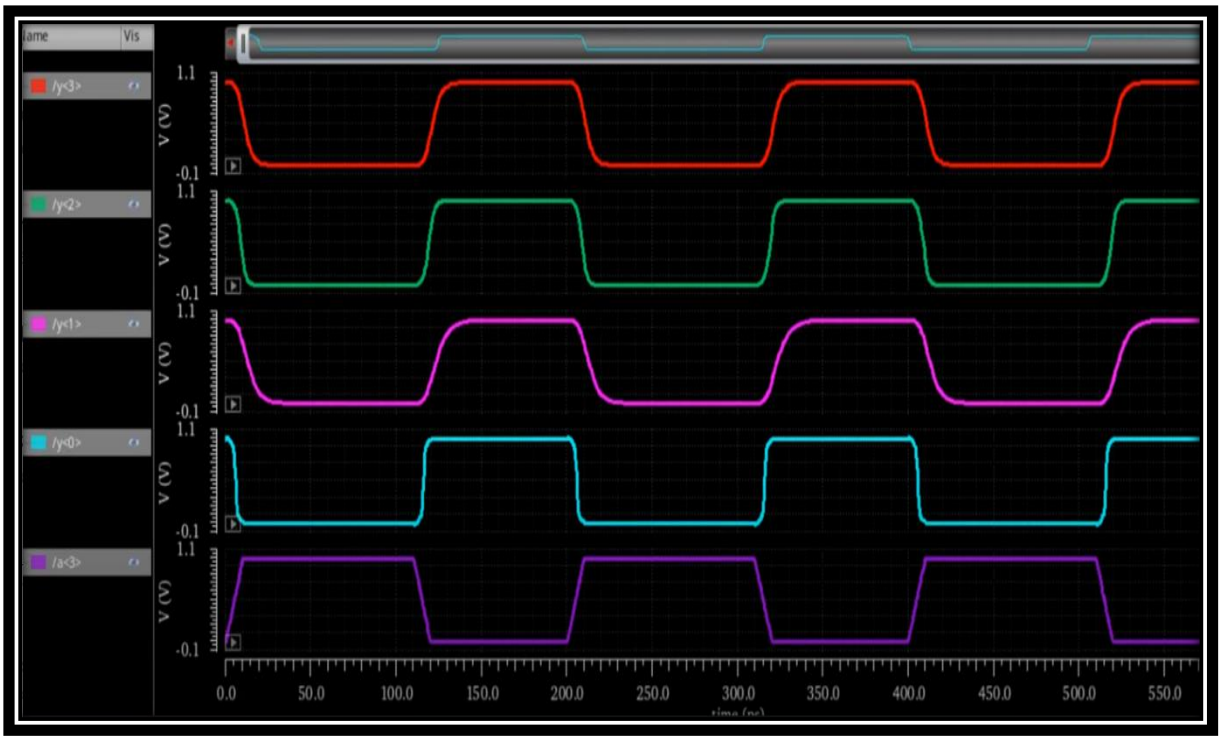

Figure 4.1: Simulation Results of NOT Array

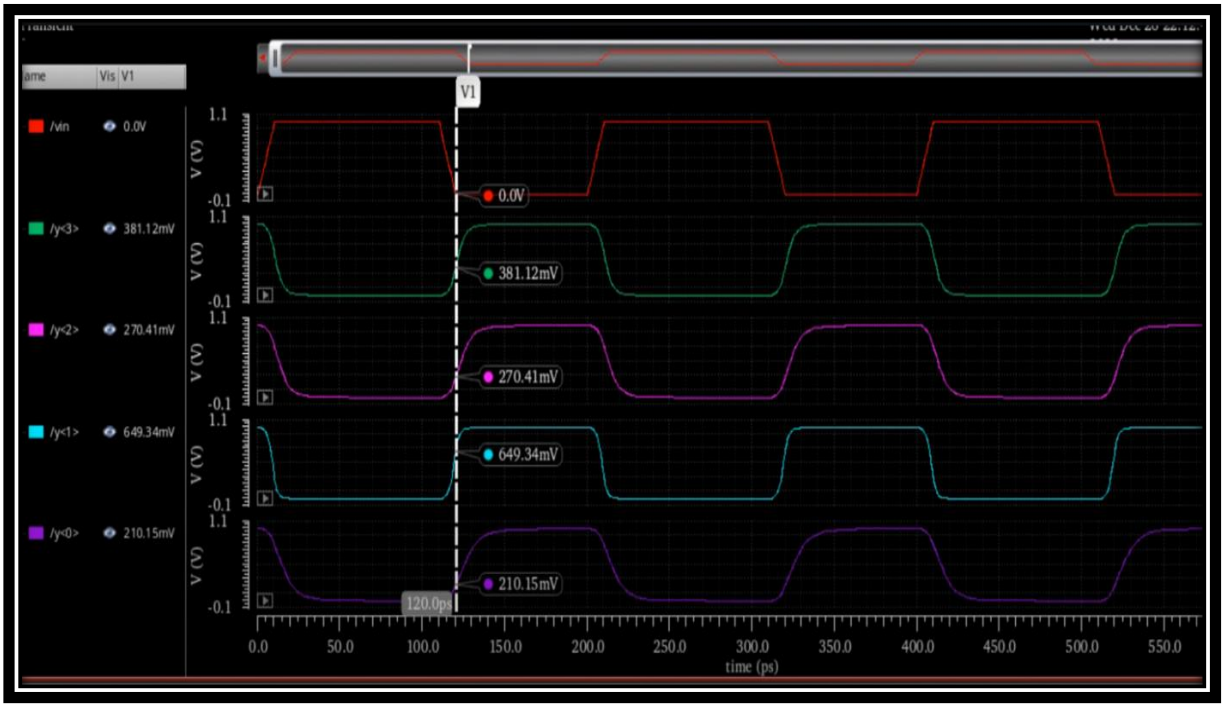

Figure 4.2: Simulation Results of Array and Buses

5. ADVANTAGES AND DISADVANTAGES

5.1 Advantages:-

1. **Scalability:** Arrays allow easy expansion of inverter structures for large-scale designs.
2. **Consistency:** Uniform design ensures matched performance across multiple inverters.
3. **Reduced Design Time:** Automated placement and routing streamline the design process.
4. **Improved Signal Integrity:** Buses reduce signal delay and power dissipation.

5.2 Disadvantages:-

1. **Increased Complexity:** Managing large arrays and bus interconnections requires careful planning.
2. **Higher Power Consumption:** Larger inverter arrays may increase power dissipation.
3. **Routing Challenges:** Proper bus design is crucial to minimize crosstalk and noise.

6. CONCLUSION

Designing inverter arrays and buses in Cadence Virtuoso is a vital aspect of digital circuit engineering, ensuring efficient and optimized circuit performance. Through systematic layout planning, proper interconnect design, and rigorous simulation analysis, engineers can develop robust and scalable inverter architectures.

While the advantages of inverter arrays and buses include scalability, uniformity, and enhanced signal integrity, challenges such as routing complexity and power dissipation must be carefully addressed. Using Cadence Virtuoso's advanced tools, designers can overcome these challenges and achieve high-performance, power-efficient digital systems.

By understanding and implementing the principles outlined in this document, engineers can effectively leverage inverter arrays and buses to develop cutting-edge integrated circuit designs that meet modern industry demands.

7. FREQUENTLY ASKED QUESTIONS (FAQs)

Q1. Why use an array of inverters instead of single inverters?
Answer: Arrays enhance circuit efficiency, scalability, and uniformity, making them ideal for large-scale digital designs.

Q2. How does Cadence Virtuoso help in designing inverter buses?
Answer: Cadence Virtuoso provides schematic, layout, and simulation tools to design, place, and analyze inverter arrays and buses.

Q3. What factors should be considered while designing buses for inverters?
Answer: Signal integrity, power dissipation, routing complexity, and delay minimization are key factors.

Q4. How can we optimize power consumption in an inverter array?
Answer: Use low-power design techniques, optimize transistor sizing, and minimize interconnect capacitance.

Q5. What are the common simulation analyses performed on inverter arrays?
Answer: DC analysis, transient analysis, and power-delay analysis ensure optimal performance.